Section 8: Underground Fibre Optic Cabling and associated hardware & fittings

6.1 Under Ground FO Cable
- 6.1.1 General
- 6.1.2 Applicable Standards
- 6.1.3 Fibre Type(s) and Counts

6.2 General Cable Constructions
- 6.2.1 Colour Coding & Fibre Identification
- 6.2.2 Strength Members
- 6.2.3 Filling Compound
- 6.2.4 The Sheath / Inner jacket
- 6.2.5 The Outer Jacket/ Termite protection
- 6.2.6 Rip Cord
- 6.2.7 Mechanical Parameters & Tests
- 6.2.8 Cable drums, Marking, Packaging and Transport
  - 6.2.8.1 Optical fibre cable marking
  - 6.2.8.2 Operating Instructions
- 6.2.9 Test and Inspection:
  - 6.2.9.1 Type Testing
  - 6.2.9.2 Factory Acceptance Testing

6.3 PLB HDPE pipe and ACCESSORIES
- 6.3.1 Construction of PLB HDPE pipe
- 6.3.2 General
- 6.3.3 Material
- 6.3.4 Dimension of pipe
- 6.3.5 Accessories of PLB HDPE pipe

6.4 Workmanship

6.5 Marking

6.6 Type Tests and Factory Acceptance Tests
- 6.6.1 Type Test
- 6.6.2 Factory Acceptance Tesing

6.7 Joint Box
- 6.7.1 Construction of Joint Box
- 6.7.2 Main Box
- 6.7.3 Cable organizer (Strength member and cable termination)
- 6.7.4 Fibre organiser/ Fibre Splice trays
- 6.7.5 Holding Arrangements
- 6.7.6 Compatibility
- 6.7.7 Marking on body of the Joint box

6.8 General

6.9 Joint box Installation

6.10 Tests and Inspection:
- 1.10.1Type tests
- 1.10.2 Factory acceptance tests

6.11 Packing and Transportation:

6.12 Installation of Underground Fibre Optic Cable System
- 6.12.1 Survey
  - 6.12.1.1 Identification of under ground fibre cable route:
  - 6.12.1.2 Survey Report
  - 6.12.1.3 Payment

6.12.2 Clearances

6.12.3 Excavation and Backfilling for Open Cut Trenching
6.12.3.1 Excavation
6.12.3.2 Backfilling
6.12.3.3 Warning Bricks
6.12.3.4 Warning Tape
6.12.4 Payments
6.12.5 Installation of PLB HDPE Pipe
6.12.5.1 Payment
6.12.6 Manholes
6.12.6.1 Payment
6.12.7 Reinstatement
6.12.8 Installation of GI Pipe
6.12.8.1 Payments
6.12.9 Installation of RCC Hume Pipe
6.12.9.1 Payment
6.12.10 Underground Fibre Optic Cable Installation
6.12.10.1 Payment
6.12.11 Trenchless Digging
6.12.11.1 Contractor's Scope of Work for Trenchless Digging
6.12.11.2 Clearances
6.12.11.3 Site Investigation
6.12.11.4 Site Preparation
6.12.11.5 Excavation and Backfilling
1.12.11.6Trenchless Digging method
1.12.11.7 Installation of PLB HDPE pipes and manholes
1.12.11.8 Acceptance testing of PLB HDPE pipes
1.12.11.9 As Built Drawings/details
1.12.11.10 List of Drawings/documents required to be submitted for Employer' approval
1.12.11.11 Payment
6.12.12 Optical fibre termination and Splicing
6.12.12.1 Fibre Optic Distribution panels
6.12.12.2 Optical Fibre Connectors
6.12.12.3 Joint Box
6.12.12.4 Optical Fibre Splices
6.12.12.5 Splicing of fibres in existing Joint Box or FODP
6.12.12.6 Service Loops.
6.12.13 Site Acceptance Testing (SAT)
6.12.13.1 SAT for Excavation, Backfilling, Installation of Pipes, Manholes.
6.12.13.2 SAT for Underground Fibre Optic Cable
6.12.13.3 SAT for Joint Box
6.12.13.4 SAT for PLB HDPE pipe
6.12.13.5 SAT for other items
6.12.14 Documentation
6.12.15 Interconnection
6.12.16 Miscellaneous Jobs
6.12.16.1 Routing of Cables inside building.
6.12.16.2 Installation of PLB HDPE pipe on wall

Underground Fibre Optic Cabling and associated hardware & fittings

This section describes the functional requirements, major technical parameters and Type testing, Factory Acceptance Testing & Site Acceptance Testing requirements for underground fibre optic cables, HDPE pipes, Joint Box, Marking, packaging, and transportation installation requirements have also been described. The under ground FO cable route length has been specified in the BOQ. The payment will be made for the executed route length only. However, specified service loops and lengths for wastage, installation/working for FO cable & HDPE ducts shall be considered as required by the bidder for which no additional payment will be made.

6.1 Under Ground FO Cable

6.1.1 General

The underground fibre optic cable (UGFO) shall be unarmoured metal free with double HDPE sheath wet core (Type-1). This non-Nylon, metal free Optical fibre cable shall be suitable for underground installation in pipes/ducts. The cable shall have double HDPE jacketing. The optical fibre cable shall be suitably protected for the ingress of moisture by flooding jelly/WS yarn and WS tape. The UGFO cable should be of low weight, small volume and high flexibility. The mechanical design and construction of each unit shall be inherently robust and rigid under all condition of operation, adjustment, replacement, storage and transport.

6.1.2 Applicable Standards

The cable shall conform to the standards named below and the technical specifications described in the following sections.

i). ITU-T Recommendations G.652
ii). Electronic Industries Association, EIA/TIA 455-78A, 455-3A, 455-62A, 455-164A/167A/174, 455-168A/169A/175A, 455-176, 455-59, EIA/TIA 598, EIA 455-104.
iii). International Electro technical Commission standards, IEC60304, IEC60794-1-2, IEC60811-5-1.
iv). Bellcore GR-20
v) Telecom Engineering Centre (TEC), Department of Telecom, Govt. of India (TEC-spec no-GR/OFC-17/01, June 2007)
vi) TEC GR for raw material (GR No. TEC/GR/TX/ORM- 01/04 Sept. -09 with errata no. 01 dtd. 25.03.2014 and subsequent amendments, if any.

6.1.3 Fibre Type(s) and Counts

The cable shall consist of Dual Window Single Mode (DWSM) fibres conforming to G.652D and the Technical parameters stipulated in Section-02 of the technical specification.

6.2 General Cable Construction

The optical cable shall consist of a central fibre optic unit protected by one or more layers of helically wound anti-hygroscopic tape or yarn. The central fibre optic unit shall be designed to house and protect the fibres from damage due to forces such as crushing, bending, twisting, tensile stress and moisture, wide temperature variations, hydrogen evolution etc. The fibre optic unit shall be of loose tube construction. The inner polyethylene jacket and outer sheath jackets shall be free from pinholes, joints, splits or any other defects. All fibre optic cable shall have a

minimum service life span of 25 years. Documentary evidence in support of guaranteed life span of cable & fibre shall be submitted by the Contractor during detailed engineering.

The cable construction and mechanical parameters for the unarmoured OFC shall be as specified in the Table 3-1 below.

Table 1-1
Unarmoured Cable Construction and Mechanical Parameters

Parameter	Units	Description		
No. of fibers in the cable		24	48	96
Type of fibers		G.652D	G.652D	G.652D
No. of fibers per tube		4	8	12
No. of loose tubes		6	6	8
Cable diameter (Nominal + tolerance)	mm	13.2±1	13.5±1	14.5±1
Nominal Cable Weight	Kg/km	135±10%	140 ±10%	170±10%
Min Continuous length		2km±10%, 4km±5%,	2km±10%, 4km±5%,	2km±10%, 4km±5%,
Cable Design Life		More than 25 years	More than 25 years	More than 25 years

6.2.1 Colour Coding & Fibre Identification

Individual optical fibres within a fibre unit, and fibre units shall be identifiable in accordance with EIA/TIA 598 or IEC 60304 or Bellcore GR-20 colour-coding scheme. The colour coding system shall be discernible throughout the design life of the cable. Colouring utilized for colour coding optical fibres shall be integrated into the fibre coating and shall be homogenous. The colour shall not bleed from one fibre to another and shall not fade during fibre preparation for termination or splicing. Each cable shall have traceability of each fibre back to the original fibre manufacturer's fibre number and parameters of the fibre. If more than the specified number of fibres are included in any cable, the spare fibres shall be tested by the cable manufacturer and any defective fibre shall be suitably bundled, tagged, and identified at the factory. The colouring scheme shall be submitted along with the cable DRS/drawing for Employer's approval.

6.2.2 Strength Members

The central fibre optic unit should include a central strength member of Fibre Reinforced Plastic (FRP) or other suitable material. Peripheral strength members and aramid yarns are also acceptable. The central FRP strength member may be slotted type with SZ lay (reverse oscillation lay) of fibre units or it may be cylindrical type with helical lay of fibre units.

6.2.3 Filling Compound

The interstices of the central fibre optic unit and cable shall be filled with a suitable compound to prohibit any moisture ingress or any longitudinal water migration within the fibre optic unit or along the fibre optic cable. The water tightness of the cable shall meet or exceed the test performance criteria as per **IEC60794-1-2-F5**. The filling compound used shall be a non-toxic

homogenous waterproofing compound that is free of dirt and foreign matter, anti-hygroscopic, electrically nonconductive and non-nutritive to fungus. The compound shall also be fully compatible with all cable components it may come in contact with and shall inhibit the generation of hydrogen within the cable. The filling compound shall remain stable for ambient

temperature up to +70°C and shall not drip, flow or leak with age or at change of temperature. Reference method to measure drip point shall be as per **IEC 60811-5-1** and drip point shall not be less than 70°C.

6.2.4 The Sheath / Inner jacket

The sheath shall be black, smooth, concentric, and shall be free from holes, splits, blisters and other surface flaws. The sheath shall be extruded directly over the central fibre optic unit and shall also be non-hygroscopic. The cable sheath design shall permit easy removal without damage to the optical fibres or fibre units. The sheath shall be made from good quality of weather resistant polyethylene compound (Black High Density Polyethylene- HDPE) and thickness shall be > 1.2mm.

6.2.5 The Outer Jacket/ Termite protection

The outer jacket shall be made of non-Nylon HDPE sheath, the HDPE sheath shall be as outer jacket. The outer jacket shall have smooth finish and shall be termite resistant. HDPE sheath thickness shall be > 1.6mm.

6.2.6 Rip Cord: Suitable rip cord(s) shall be provided to open the outer sheath of the cable. The rip cord(s) shall be properly waxed to prevent wicking action and shall not work as a water carrier.

6.2.7 Mechanical Parameters & Tests : The offered cable shall meet requirement of mechanical characteristic & tests specified in latest TEC specifications.

6.2.8 Cable drums, Marking, Packaging and Transport

All optical fibre cable shall be supplied on strong wooden drums provided with lagging with adequate strength, constructed to protect the cabling against all damage and displacement during transit, storage and subsequent handling during installation. The cable drum shall be suitable to carry underground fibre optic cable of length upto 4 Km ±5% or 2 km ±10%. The Contractor may offer higher cable drum length in straight routes subject to transportation, handling and installation limitations. However, the exact lengths for drums to be supplied for each link shall be determined by the Contractor during detailed engineering/survey. Drum schedule shall be approved by the Employer before manufacturing the FO cable. Both cable ends in the drum shall be sealed and shall be readily accessible. The drum shall be marked with arrows to indicate the direction of rotation. Both the ends of the cable shall be provided with pulling eye. The pulling eye and its coupling system should withstand the same tensile load as applicable to the cable. The following marking shall be done on each side of the cable drums.

i) Drum number
ii) Consignee's name and address
iii) Contractor's name and address
iv) Type of cable
v) Number of fibres

vi) Type of fibres
vii) Year of manufacturing, month & batch no
viii) Name of manufacturer
ix) Total cable length

x) Inner end marking and Outer end marking

Packing list supplied with each drum shall have all the information provided on marking on the respective cable drum and following additional information: OTDR length measurement of each fibre and Ratio of fibre and cable length.

6.2.8.1 Optical fibre cable marking

A suitable marking shall be applied in order to identify this cable from other cables. Marking on the cable shall be indeliable, of durable quality, shall last long and shall be applied at regular interval of one-meter length. Marking shall be imprinted and must clearly contrast with the surface and colors used must withstand the environmental influences experienced in the field. The accuracy of the sequential marking must be within $\pm$ 0.5% of the actual measured length. The sequential length marking must not rub off during normal installation. In case laser printing is used the marking shall not exceed 0.15 mm depth. The optical fibre cable shall have the following markings in every meter.

i) Type of Cable
ii) Running meter length
iii) Number of fibres
iv) Type of fibre
v) Laser symbol & caution notice
vi) Year of manufacture and batch no.
vii) Manufacturer's name
viii) Employer's Name

6.2.8.2 Operating Instructions

Complete technical literature in English with detailed cable construction diagram of various sub-component with dimensions and test data of the cable shall be provided. All aspects of installation shall also be covered in the handbook.

6.2.9 Test and Inspection:

The general conditions for Type, Factory Acceptance Testing & Site Acceptance testing shall be as per Section-08 of the technical specifications.

6.2.9.1 Type Testing

The Bidder shall have valid Type Approval Certificate (TAC) from TEC/Technical Specification Evaluation Certificate(TSEC) given by BSNL QA for 24F/48F Metal Free Optical Fibre Cable with double HDPE sheath OFCs at the time of bid submission and a copy of valid TAC/TSEC certificate shall be submitted and proof for submission shall be submitted along with the bid. However, the bidder shall ensure that in all the cases the TSEC/TEC certificate would be valid at the time of award. In case type approval certificate validity expires after placement of Letter of Award (LoA), the contractor shall take advance action so that the supply is not delayed due to non-availability of type approval certificate for the offered fibre optic cable meeting the requirement. In case, TSEC/TEC certificate of UGFO cable is not available, the Contractor shall

submit the previously carried out type test report for the same design of cable for the tests listed in Table 3-2(a) below. The fibre should have been type tested as per relevant International standards for the tests listed in Table-3-2(b) and the Bidder shall submit the test reports and certificates along with the bid. The Contractor shall submit the type test reports of fibres meeting the minimum requirement specified in Tables-3-2(b) below.

Table 3-2 (a) Type tests for Under ground Fibre Optic Cable	
1.	Tensile Strength Test
2.	Abrasion Test
3.	Crush Test (Compressive Test)
4.	Impact Test
5.	Repeated Bending Test
6.	Torsion Test
7.	Kink Test
8.	Cable Bend Test
9.	Temperature Cycling
10.	Cabling Aging Test
11.	Water penetration Test
12.	Flexural Rigidity Test on the optical fibre cable
13.	Test of Figure of 8 (Eight) on the cable
14.	Static Bend test
15.	Fibre curl
16.	Cable sheath yield strength and ultimate elongation
17.	Embrittlement Test on loose tube
18.	Kink Resistance on loose tube
19.	Drainage Test for loose Tube
20.	Check of easy removal of sheath
21.	Check of effect of aggressive media on the cable surface (Acidic and Alkaline behaviour
22.	Seepage of filling compound

Table 1-2(b)
Type Tests For Optical Fibres

S. No.	Test Name	Acceptance Criteria	Test procedure
1	Attenuation	As per Section-02 of TS	IEC 60793-1-40 Or EIA/TIA 455-78A
2	Attenuation Variation with Wavelength	As per Section-02 of TS	IEC 60793-1-40 Or EIA/TIA 455-78A
3	Attenuation at Water Peak	As per Section-02 of TS	IEC 60793-1-40 Or EIA/TIA 455-78A
4	Temp. Cycling (Temp dependence of Attenuation)		IEC 60793-1-52 Or EIA/TIA 455-3A, 2 cycles
5	Attenuation With Bending (Bend Performance)		IEC 60793-1-47 Or EIA/TIA 455-62A

Table 1-2(b)
Type Tests For Optical Fibres

S. No.	Test Name	Acceptance Criteria	Test procedure
6	Mode Field dia.		IEC 60793-1-45 Or EIA/TIA 455-164A/167A/174
7	Chromatic Dispersion		IEC 60793-1-42 Or EIA/TIA 455-168A/169A/175A
8	Cladding Diameter		IEC 60793-1-20 Or EIA/TIA 455-176
9	Point Discontinuities of attenuation		IEC 60793-1-40 Or EIA/TIA 455-59
10	Core -Clad concentricity error		IEC 60793-1-20 Or EIA/TIA 455-176
11	Fibre Tensile Proof Testing		IEC 60793-1-30 Or EIA/TIA 455-31B
-End Of table-			

6.2.9.2 Factory Acceptance Testing

The tests listed in Table 3-3 shall be carried out as Factory Acceptance Test for Underground fibre optic cable meeting the requirements specified in this section.

Table 1-3
Factory Acceptance Tests on Underground Fibre Optic Cable

S. No.	Factory Acceptance Test
1	Attenuation Coefficient (1310, 1550): By EIA/TIA 455-78A or OTDR
2	Point discontinuities of attenuation: By EIA/TIA 455-78A or OTDR
3	Visual Material verification and dimensional checks as per approved drawings
4	Water Penetration test
5	Tensile strength test
6	Impact test
7	Kink test
8	Environmental test
9	Crush Test

6.3 PLB HDPE PIPE and ACCESSORIES

The following paragraphs describe the functional requirements, major technical parameters and Type and Factory Acceptance Testing requirements for Permanently Lubricant High Density Polyethylene (PLB HDPE) Pipe. PLB HDPE pipe shall be suitable for underground fibre optic cable installation by blowing as well as conventional pulling. The PLB HDPE pipe shall be suitable for laying in trenches by directly burying, laying through G.I/RCC hume pipe and laying through trench less digging. The expected service life of HDPE pipe and accessories shall not be less than 50 years. Documentary evidence in support of guaranteed life span shall be submitted by the Contractor during detailed engineering.

The unit rates quoted in the price schedule shall be the composite price of PLB HDPE pipe along with all accessories.

6.3.1 Construction of PLB HDPE pipe

The PLB HDPE pipe shall have two concentric layers viz. outer layer and inner layer. The outer layer shall be made of HDPE material and the inner layer of solid permanent lubricant. These concentric layers shall be co-extruded and distinctively visible in cross-section under normal lighting conditions and generally conform to IS-9938. The colour of the PLB HDPE pipe shall be finalized during detail engineering. In the finished PLB HDPE pipe, the co-extruded inner layer of solid permanent lubricant shall be continuous and integral part with HDPE outer layer and preferably be white in colour. The inner layer of solid permanent lubricant shall not come out during storage, usage and throughout the life of the pipe. The pipe shall be supplied in a continuous length of 1000 (one thousand) meter in coil form, suitable for transportation, installation and handling purposes.

The finished pipe shall be of good workmanship such that the pipe is free from blisters, shrink holes, flaking, chips, scratches, roughness, break and other defects. The pipe shall be smooth, clean and in round shape, without eccentricity. The ends shall be cleanly cut and shall be square with axis of the pipe.

6.3.2 General

The HDPE pipe shall conform to the following standard and the technical specifications described in the following sections.

a) IS: 4984 / IS: 2530/IS:14151/(part1)/ IS:9938/IS:7328/IS12235(Part-9)/IS:5175
b) ASTM D 1693/ ASTM D 638/ ASTM D 648/ ASTM D 790 / ASTM D 1712/ ASTM D 2240/ ASTM D 4565 / ASTM F 2160/ ASTM G 154
c) TEC-spec no. GR/CDS-08/02/NOV-04(including all amendments)-HDPE pipe for use as duct for optical fibre cable.

6.3.3 Material

The raw material used for the PLB HDPE pipe shall meet the following requirements:

(i) The anti-oxidant establishers, color master batch and other additive used shall be physiologically harmless and shall be used only to minimum extent necessary to meet the specification.

(ii) Usage of any additives used separately or together, should not impair the long-term physical and chemical properties of the PLB HDPE pipe.

(iii) Suitable Ultra Violet stabilizers may be used for manufacture of the PLB HDPE pipe to protect against UV degradation when stored in open for a minimum period of 8 months.

(iv) The ash content of the colour master batch shall not be more than 12% when tested as per method detailed below:
Test Method for ash content: About one gram of the sample under test shall be taken and dried at 105°C for two hours in a plantinum or glazed porcelain or silica or quartz crucible. The weight of the sample shall be noted. Subsequently, the sample with the crucible shall be transferred to a muffle furnace maintained at 600±50°C and allowed to remain there for three hours. The ash content content may be calculated as a percentage of the weight of the original sample.

(v) The base HDPE resin used for manufacturing outer layer of pipe shall conform to any grade of IS-7328 or to any equivalent standard meeting the following requirement when tested as per standards referred in this Section below.

a) Density (outer and inner layer): 940 to 958kg/m^3 at 27°C. The density of completed PLB HDPE shall not be differ by more than 0.003gms/cc by this value when tested as per IS:2530 or IS:7328.

b) Melt Flow Rate (MFR): 0.2 to 1.1 g/10 minutes at 190°C & 5 kg load: when tested as per IS:2530. The MFR of the outer layer of the completed PLB HDPE pipe shall not differ by more than 30% of this value.

c) Tensile Strength at Yield: 20 N/mm^2 minimum, when tested As per ASTM D 638, Type-IV specimens

d) Elongation at break: >600%, when tested as per ASTM D638, Type-IV specimens

e) Flexural Modulus at 1% strain: 690 N/mm^2 minimum, when tested as per ASTM D 790.

f) Hardness, Shore-D: Between 60 and 65 units, when tested as per ASTM D 2240

g) Heat Deflection Temperature at 45 g/mm^2: 65ºC minimum, when tested as per ASTM D 648.

h) Environmental Stress Crack resistance, When tested with 10% Igepal, CO 0630 Solution 50ºC: 96 hrs., when tested as per ASTM D 1693, No cracks.

i) Weathering in artificial (UV) light (Specimens shall be as per ASTM D 638 Type-IV) and cut from compression moulded sheet. After exposure for 720 hrs., Tensile strength shall be tested. The variation shall not be greater than 20% compared to tensile strength obtained at above.

j) OIT (in Aluminium Pan): 30 minutes minimum, when tested as per Annexure-I.

k) UV Stabliser Content: Hindered Amine Light Stabliser minimum 0.15%, when analysed as per FT-IR method.

(vi) In the inner layer of PLB HDPE pipe, the friction reducing, polymeric material to be used as the inner layer lubrication material shall be integral with HDPE layer. The lubricant materials shall have no toxic or dermatic hazards for safe handling.

6.3.4 Dimension of pipe

The nominal size of the pipe shall be 40mm and shall meet the following requirements.

(i) Outside diameter	40 mm + 0.4 mm
(ii) Wall thickness	3.5 mm (+0.2 mm/ -0.00 mm)
(iii Standard length	1000 meters ± 100 meter
(iv) Thickness of permanent lubricant,	$\geq$ 0.4 mm
(v) Maximum outer diameter of FO cable that can be installed by blowing technique	13.4±0.5 mm or cable dia whichever is higher

6.3.5 Accessories of PLB HDPE pipe

The following accessories are required for jointing the pipe and shall be supplied along with the pipe. The manufacturers shall provide complete design details, procedure for method of installation and type of the material used for the accessories. No part of the accessories shall contain metal part and minimum pulling force of the coupler shall be 330kgf. The accessories shall pass the ageing test at 70+2ºC and there shall be no leakage when tested for 168 hours.

i) Plastic coupler: The coupler shall be used to join two PLB HDPE pipes. The coupling shall be able to provide a durable airtight and watertight joint between two pipes without deteriorating the strength of the pipes. The strength of coupler shall match the primary strength of the PLB HDPE pipe and threaded coupler is not acceptable. The jointing shall meet the air pressure test of 15 kg/cm^2 for a minimum period of 2 hours without any leakage.
ii) End plug: This shall be used for sealing the ends of empty pipe, prior to installation of FO cable and shall be fitted immediately after laying of the PLB HDPE pipe, to prevent entry of any unwanted elements such as dirt, water, moisture, insects/rodents etc.
iii) Cable sealing plug: This is used to hold the cable and prevent entry of any unwanted elements, as specified above.
iv) End cap: This cap is made of hard rubber, shall be fitted with both ends of PLB HDPE pipe to prevent the entry of any unwanted elements such as dirt, water, moisture, insects/rodents during transportation and storage.
v) Set of installation/maintenance accessories comprising of C-Spanners for tightening plastic coupler (4 nos.), Rotary duct cutter (2 nos.), spare cutting wheel (4 nos. per Rotary Duct cutter), Chamferring tool for giving slight chamfer to the

ends of PLB HDPE pipe shall be used during maintenance of the PLB HDPE pipes and these items (1set) shall be supplied along with the pipe.

6.4 Workmanship

The pipe shall be free of blisters, shrink holes, break and other defects. The PLB HDPE pipe ends shall be cut as square as possible to longitudinal aspects. The internal and external PLB HDPE pipe surfaces shall be smooth. The color should be uniform throughout.

6.5 Marking

All the pipe, shall be clearly marked at intervals of 1 meters with the following data which is not less than 5 mm high. The details of marking on pipe shall be approved by Employer before commencement of manufacturing.

i) POWERGRID with logo
ii) Manufacture's name or trade mark
iii) Year of manufacturing
iv) Type of PLB HDPE pipe and size
v) Running length marking

6.6 Type Tests and Factory Acceptance Tests: The general condition of testing & inspection is mentioned as below:

6.6.1 Type Test

The PLB HDPE pipes & accessories offered to be supplied should have been type tested as per requirement specified in relevant TEC specification or equivalent standard. The Bidder shall enclose the previous type test report and/or type approval certificate from Telecom Engineering Centre (TEC), Department of Telecommunication/Technical Specification Evaluation Certificate(TSEC) given by BSNL QA, according to relevant TEC for the proposed PLB HDPE duct meeting the specified requirement.

6.6.2 Factory Acceptance Testing: The following tests shall be carried out during Factory Acceptance Testing (FAT) in Table 1-4.

Table 1-4
Factory Acceptance Test on PLB HDPE pipe & Accessories

S.No.	Name of the test
1	Visual Inspection
2	Dimension Check
3	Hydraulic Characteristics
4	Reversion Test
5	Tensile Strength and Elongation Test
6	Environmental Stress Crack Test
7	Impact Strength Test
8	Crush Resistance
9	Mandrel Test
10	Ovality Test

11	Coil Set Test
12	Internal Co-efficient of Friction
13	Ash content
14	Colour fading
15	Optical Fiber Cable Blowing Test
16	Air Pressure test on plastic coupler
17	Ageing test on accessories

The air pressure test of plastic coupler shall be carried out for at least two joints made together with the offered PLB HDPE pipe. Each of the offered PLB HDPE pipe reels shall be weighed which should not be less than as specified in the DRS.

6.7 Joint Box

This following paragraphs specification gives the general requirements, type and factory testing requirements of Joint Box for underground optical fibre cables. The packaging and transportation requirements have also been specified.

The Joint Box should be suitable for use in Manholes as well as direct buried applications. It shall also be possible to branch out the cable from the Joint box as and when required without damaging the existing cables. The Joint box shall have minimum 4 single cable entry ports and one oval port (60x40mm) having sealed designed such that it will be opened by cutting only as and when required. All materials used for Joint box and sealing shall be termite resistant.

For specification of FODP refer Section-02 of technical specification.

6.7.1 Construction of Joint Box

The Joint box shall be manufactured as per the latest state of art technology. The design of the Joint box must ensure:

(i) Mechanical and optical protection of the fibre.
(ii) Environmental protection of the splice.
(iii) The integrity of the connections and cable seals, fibres and buffers during mounting, functioning and dismounting.
(iv) The possibility of the repeated reopening and re-closing of the joint box and fibre organizer without removing or modifying the joint box but only by replacing the sealing.
(v) The addition of new cables shall be possible in the same joint box, if required.
(vi) It shall be possible to terminate all cables having outer diameter from 8mm to 18mm.

The Joint Box shall be complete in all respect and shall consist of following main parts:

6.7.2 Main Box

The main box shall be sturdy, durable box having a base and dome shaped body. The dome shall be fixed on the base. The domed shaped body shall cover the entire junction while the base shall enable the entries of the optical fibre cable. The base and dome shall be made of thermoplastic/High density polypropylene material. The Joint Box should be suitable for opening and reentry frequently without impairing its properties. The body may have ribs as strength member if required.

6.7.3 Cable organizer (Strength member and cable termination)

Cable organizer shall be suitable to secure extra length of fibre tubes with safe bending radius. It should not cause any strain or tension on the fibre. It shall be possible to fix the strength member(s) and the optical fibre cable firmly so that the cable arrangement will not shift or move laterally inside the Joint box. The Internal structure shall be metallic (made of stainless steel) to support and hold the cables and strength members etc. The metallic parts for making connections shall be made of Brass or Nickle Chromium plated steel and the total assembly shall be corrosion proof.

6.7.4 Fibre organiser/ Fibre Splice trays

Fibre organiser shall be non-metallic made of ABS material having following characteristic.

(i)	Specific gravity	1.01-1.21 gm/cc	ASTM-D-792
(ii)	Tensile strength	0.002kg/sqmm - 0.005kg/mm	ASTM-D-638
(iii)	Elongation	<50%	ASTM-D-638
(iv)	Water absorption	0.3-0.4	ASTM-D-57-59
(v)	Rock well hardness	R81-R111	ASTM-D785A

Contractor shall furnish test certificates in conformity to the above parameters of the ABS material. Fibre organiser cassettes shall be provided on which the fibre splice and service loops of fibres may be placed by making fibre coils. Slots on the splice tray for fixing splice protection sleeve shall be in such a way that they will not cause any stress or strain on sleeve or fibre and shall not shift, loose or move inside the tray or come into conflict with the fibre coils once fixed. It shall be possible to fix a minimum of 4 secondary tubes at the entry port of each tray. No PVC or any other type of adhesive tape is permitted to hold fibres and loose tube inside the tray. All fibres of a tube shall be spliced in a single tray for better tube identity and fibre looping.

The fibre organiser shall be fixed inside the Joint box in such a way that this shall not loosen once fixed or to shift or move in any way.

6.7.5 Holding Arrangements

The box shall provide the following:

(i) Holding arrangement and framework for properly securing cable organizers with splice trays.
(ii) Securing arrangement for holding fibres.
(iii) Holding device to hold strength member of fibre optic cable securely.
(iv) Any other extra component required for providing strength and reliability to the Joint Box.

6.7.6 Compatibility

All the component and parts used shall be compatible with the optical fibre cable, fibre splices and cable components. Their use for long should not result in increase in transmission loss or deterioration in other properties.

6.7.7 Marking on body of the Joint box

The following information by marking on Joint box shall be provided:

(i) Manufacturer's name & date
(ii) Type of Joint box
(iii) Number of Splice organiser cassettes
(iv) Number of splices per cassette
(v) Batch number and serial number.

6.8 General

The Joint Box shall confirm to the ITU-T Standards or latest standards prescribed by TEC. Other important requirements are as follows.

(i) Assembly: - The method of assembly, box and reopening shall be simple and adoptable with minimum training.
(ii) Component:- All component shall be durable and of good quality. Number of component should be minimum and adequate.
(iii) Consumables:- Consumables mentioned in technical specification or any other items required shall form a part of Joint Box.
(iv) Capacity of Joint Box:- The Joint Box shall be suitable for splicing for 24 fibre cables. Suitable Joint Box shall be provided to encase the optic cable splices in a protective, moisture and dust free environment. The Joint Box shall be designed for the storage and protection of a minimum of 24 optical fibre splices and equipped with sufficient number of splice trays for splicing all fibre in the cable. If and when required the capacity of Joint box can be increased by adding extra splice trays only.

6.9 Joint box Installation

Installation and sealing of Joint box shall be done according to the instruction manual provided with joint box. The following general criteria must be fulfilled.

(i) Fibre loose tubes shall be placed safely inside the joint box and routed properly.
(ii) Sheath shall be fully inside the joint box and FRP shall be properly fixed.
(iii) Silica Gel shall be placed inside the joint box before closing the box.
(iv) The sealing portion of the cable and joint box shall be filled before placing heat shrinkable sleeves. Rubber gaskets may be placed according to the instruction manual, if any.
(v) The heat shrinkable sleeves shall be sealed with very low flame of Hot gun till sealing liquid properly melt and gripped. The cable entry ports being used for cable entry into the joint box shall be sealed by heat shrink sleeves only for ease of installation and reentry. The length of the sleeve shall cover the full length of the cable entry port and at least 30mm length of the cable. Heat shrink tube shall have wall thickness of at least 1.5mm before shrinkage and ≥2.5 mm after recovery. For sealing of base with dome, contractor may use mechanical sealing or heat shrink sleeve system. In case of mechanical sealing contractor shall indicate the exact method. The gasket or the "O" ring required for sealing shall be made of Neoprene rubber and after sealing it shall be air-tight.
(vi) The Joint box shall be fixed vertically on the wall of the manhole with the help of suitable holding SS ring and nut bolt arrangement keeping the cable entry point

downwards.

(vii) The Joint box shall be fixed on the poles with the help of suitable holding SS ring and nut bolts arrangement and preferably keeping the cable entry point downwards.

6.10 Tests and Inspection:

The general conditions for Type Testing and Factory Acceptance Testing (FAT) shall be as mentioned below:

6.10.1 Type tests:

The joint box offered to be supplied should have been type tested as per relevant TEC specifications including latest amendments or equivalent standard. The Bidder shall submit along with their bid the earlier carried out type test reports of last and/or TEC certificates/Technical Specification Evaluation Certificate(TSEC) given by BSNL QA for the offered joint box meeting the requirement.

6.10.2 Factory acceptance tests

The following test mentioned in table 1-5 shall be carried out as factory acceptance test for joint box.

Table 1-5
FAT for Joint Box

Sr.No.	Name of test
1	Visual Inspection
2	Tightness (Sealing) Test
3	Static Load test
4	Impact test
5	Axial pull out test
6	Bending test
7	Water ingress test
8	Reopening test

6.11 Packing and Transportation:

The Joint Box shall be transported after proper packing including the list of all sub-component, required maintenance spares. Consumables, mentioned in table 1-6 shall be supplied along with each Joint box. All Joint boxes shall be supplied with installation manuals. Each Joint Box shall be fully packed with all its components. All tools and accessories should be properly packed with each Joint Box and the Joint Box packets should be placed inside an adequate size container for good looking packing and safe transportation. The technical literature along with detailed drawing of all assemblies and parts shall be provided. All the aspects of installation, operation, maintenance, precautions and repair shall be covered in the manual.

Table 1-6
List of consumables to be supplied with Joint box

S.no	Item	Qty.
1	Protection sleeves For example, for 12fibre Joint box, protection sleeves shall be 18.	As per the fibre count in the cable + 50% extra quantity
2	Cable tie	12 numbers of required length
3	Tissue/Lens paper 3"x4"	100 numbers
4	Acetone (Lab grade)	100 ml
5	Hexane (Lab grade)	100 ml
6	Isopropyl (Lab grade)	100 ml
7	PVC adhesive tape (5meter length of 10mm width	1 number
8	Double side adhesive tape	1 number
9	Sealing arrangement	1+1 (One complete set to be supplied as a spare) for all sealing ports.
10	Cable and fibre identification rings	2 sets
11	Transport tube	As per the requirements
12	Gasket or O-ring (in case of mechanical sealing)	1+1 (One O-ring to be supplied as a spare
13	Silica Gel	2 packets each of 50 grams for each closure supplied. This shall be so packed that it can be tied with the internal mechanical structure of the closure inside the closure
14	Any other item	As per the requirements

6.12 Installation of Underground Fibre Optic Cable System

This part of the section describes the installation procedures and methods including survey, clearances, excavation of trenches and pits, trenchless digging, installation of PLB HDPE pipes, installation of RCC hume pipes and GI Pipes, marking, backfilling, installation of underground cable, construction of manholes, splicing, termination and site acceptance testing requirements of the underground fibre optic cabling system.

This specification is applicable for underground optical fibre installation work and some miscellaneous works to be executed inside city/town. The quantities indicated in the BoQ are indicative only and the final quantities against individual items will be approved by the Employer after detailed survey and depending upon the site condition.

6.12.1 Survey

The choice of route is most important aspect in planning an underground cable system. The correct choice is essential to reduce the cost of laying pipes, keeping the pipes safe from damage and to attain their maximum utilisation when they have been laid.

The survey shall be conducted for underground fibre optic cable routes as described below to finalise the route and paths for the underground fibre optic cable. For underground fibre optic cable links, location of customers such as: Telecom service providers (DoT/BSNL, other basic

operator, Cellular, Pager, ISPs etc), Major business centres, Bulk data users (Corporate Houses, universities, colleges etc) shall be identified by the Contractor and submitted to Employer by suitably marking the locations on a city map of proper scale.

In certain cases there will be routes where the Employer has finalised the route for the installation of PLB HDPE pipe vis-à-vis the underground OFC, or PLB HDPE pipe is already installed by POWERGRID or other agency. In such cases, the Employer shall provide the details of the finalised route or existing PLB HDPE pipes routes to the extent possible. However, to carry out the fibre optic cable installation, the Contractor shall carry out the required survey of the routes.

6.12.1.1 Identification of under ground fibre cable route:

The Contractor shall propose preferably two most suitable routes (unless availability of a single route is obvious) for each link keeping in view the following broad criteria:

a. The route shall be as straight and as short as possible.
b. The route shall have minimum obstacles in order to minimise reinstatement cost.
c. Clearances required from other authorities/bodies are minimum and that the clearances can be obtained expeditiously.
d. Wet or unstable ground shall be avoided to the extent possible.
e. The route for the pipes shall be away from the carriage-way of the road to the extent possible.
f. The route shall be suitable for placing manholes wherever required.
g. Future expansion of roads shall be taken into consideration.
h. Road, rail, river, nallah crossings, horizontal direction drilling shall be minimum.
i. Underground fibre optic cable route shall be so chosen that it would be possible maintain sufficient distance from existing underground cables and to do excavation and backfilling along the route without disturbing the existing cables laid by other operators/utilities during installation of PLB HDPE pipe or future maintenance, to the extent possible subjected to ROW clearance.

6.12.1.2 Survey Report

The Contractor shall submit the survey report with the most suitable two alternate routes for all the fibre optic links along with details described above. The Employer shall choose one of the two alternatives. On finalisation the Contractor shall carry out detail survey for the selected routes and submit the final survey report for approval before implementation. The final survey report shall include at least the following:

a. A drawing of the proposed route indicating all details of the route including name of the road, GIS co-ordinates at every 25 mtrs, relevant details of soil strata, bridges, culverts, causeways, rail over/under bridges, defence area, underground gas / oil / water pipe line, power and communication cables routes, other important landmarks etc.
b. The distance of the fibre optic cable route from the centre of the road/rail/river//bridge/culvert etc. shall be indicated on the route maps as well as documented in tables.
c. Sections of the links where Horizontal Direction drilling, Moling and Manual auguring may be required.
d. Sections where GI or RCC hume pipe may be required.

e. Location and number of permanent and temporary manholes.
f. Location of all turns, bends and major landmarks.
g. Type, quantity and location of all the joint boxes. Care must be taken to minimise the number of splicing and joint boxes.
h. Section lengths of the underground fibre optic cable, total length of each link and drum scheduling for all the link.
i. List of authorities from which clearance shall be required to be obtained for each relevant section.

The final survey report shall have to be approved by the Employer and requisite clearances (as indicated below in this section) need to be obtained before the cable installation work is commenced.

For the routes where the Employer has finalised the route for installation of PLB HDPE pipe vis-à-vis the underground OFC or where PLB HDPE pipe is already installed by the Employer/Owner or other agency, the Contractor will survey the route to facilitate installation of optical fibre cable, and submit the final survey report as per above description.

The scope of survey shall also include the route and tentative Bill of Materials (pipes, couplers, manholes, G.I. pipes, RCC pipes, Joint box, conduits, bends, trays, warning bricks, Warning tape etc. and any other items required for successful implementation of the links) for the interconnection of optical fibre cable from the nearest manhole to the fibre termination box(FODP). It may be noted that routing of optical fibre cable inside the building may require installation on the walls and floors using suitable pipes, conduits, bends, trays etc and minor civil works (e.g. making holes on the walls, cutting grooves on walls/floor and making good etc.). The Contractor will also indicate sections where the OFC may be required to be installed overhead using poles/other supports and guide wires, because of non-feasibility in installation underground or lack of clearance from authorities.

6.12.1.3 Payment

The BoQ in the appendices indicates the fibre optic route length to be surveyed by the Contractor. The Contractor may be required to conduct additional surveys as per clause 3.12.2 Clearances, such survey shall not entitle the Contractor to any additional payment from the Employer/Owner. The payment for the survey shall be made after final survey report is submitted and approved by the Employer on per link basis based on the actual route length of fibre optic links.

6.12.1.4 Clearances

The Contractor shall be responsible for obtaining necessary clearances for excavation work from the authorities on behalf of the Employer and provide requisite copies of information, maps, survey report etc to the authorities. The Employer shall assist the Contractor in obtaining such clearances by providing the authority letter or any other relevant document. The Contractor shall make an all out effort with the concerned authority to get clearances expeditiously and to negotiate the least cost to the Employer. The Employer shall furnish all required bank guarantees and make payments to the concerned authorities directly based on the demand letter obtained by the Contractor from the concerned authorities. The Contractor shall ensure quick and speedy clearances in order to implement the project within stipulated schedule. In case the authorities have some objections on certain sections of routes proposed and are unwilling to provide clearances, the Contractor shall propose an alternate route, promptly carry out the survey and

submit specific survey report for that and reapply for clearance after taking into account the comments/objections of the authority.

6.12.3 Excavation and Backfilling for Open Cut Trenching

The Contractor shall carry out excavation and backfilling of trenches in all kinds of soil strata such as normal soil, soft rock, hard rock for laying PLB HDPE pipe, RCC hume pipe and GI pipe. In addition, the Contractor shall also make suitable arrangements (except trenchless digging, which is identified separately) for laying PLB HDPE pipes, RCC hume pipes and GI pipes at all type of crossings such as pavements, all types of roads, bridges, river, nallah, rail track etc.

6.12.3.1 Excavation

The cable trenches shall be dug as per route plan and detail trench drawings (indicating the various dimensions and other details of the trench) approved by the Employer for each type of soil strata. The Contractor shall take due care and precaution during excavation to avoid possible damage of other underground plants/facilities in the proposed underground fibre optic cable route and shall indemnify the Owner/Employer for all damages and shall be solely responsible for all the damages and losses. The Owner/Employer shall not be liable for any damages/losses.

Fig 1-1 shows the dimensional view of excavation of trench and other details of installation in normal soil for PLB HDPE pipe. For the purpose of this specification, soil strata types are defined below:

Normal Soil All type of soil {i.e. dry, wet (partially or fully submerged)} except soft rock or hard rock as defined below.

Soft Rock Lime stone, laterite, hard conglomerate or other fissured rock which can be quarried or split with crow bars, wedges or pickaxes. However, if required and permitted Government authority by light blasting may be resorted to for loosening the material, but this will not in any way entitle the material to be classified as hard rock.

Hard Rock Any rock excavation other than specified under Soft Rock, for which blasting, drilling, chiselling are required.

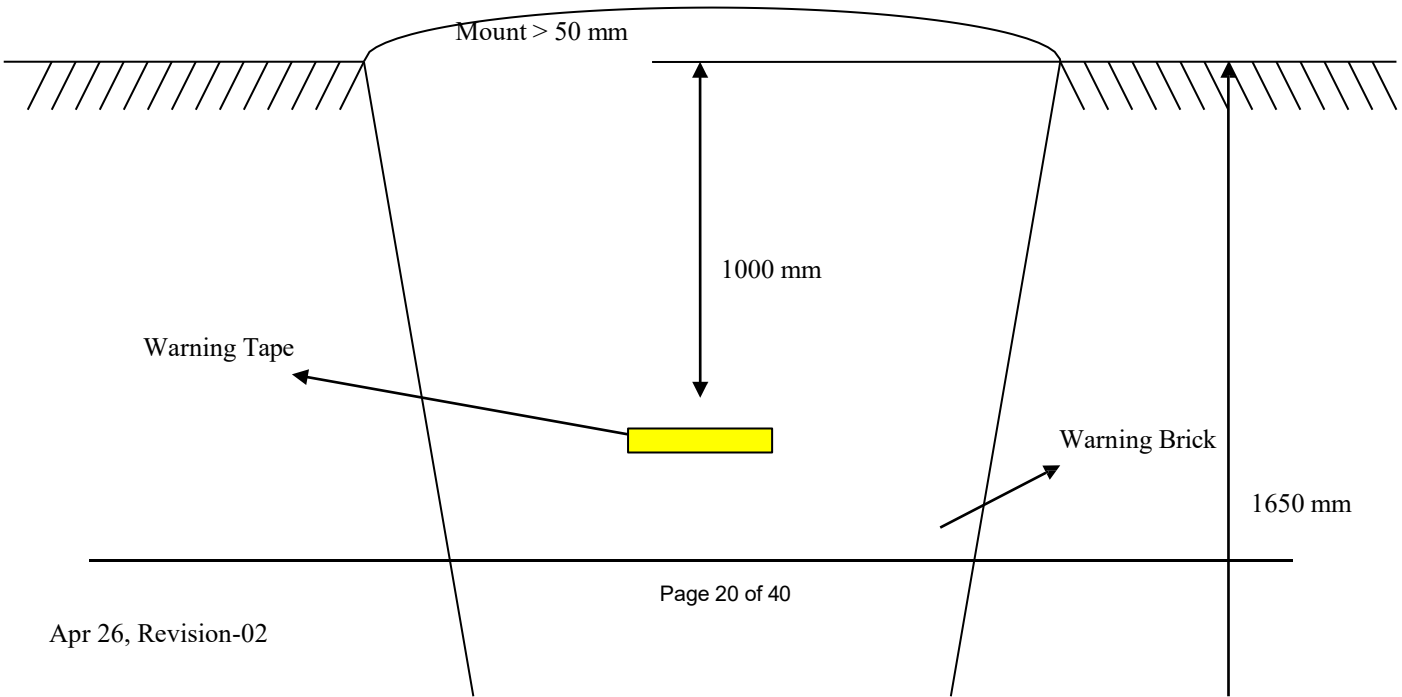

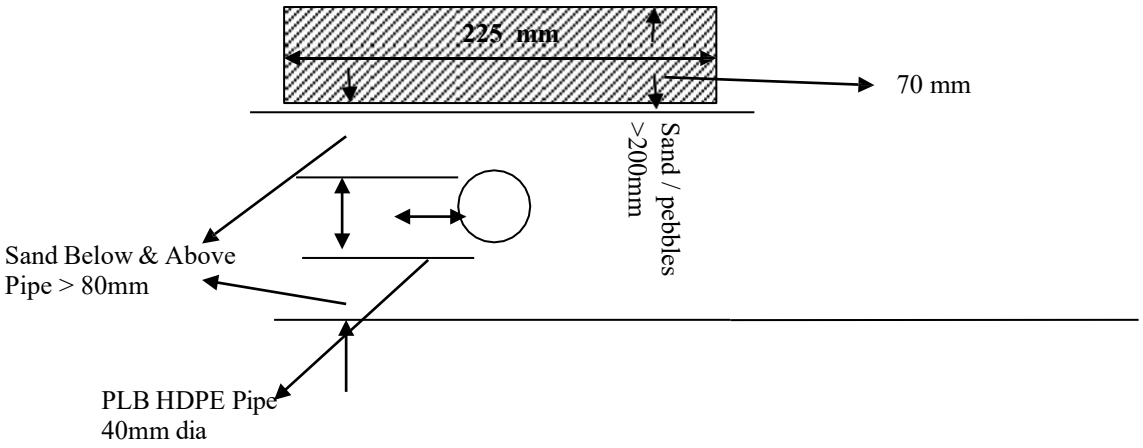

Figure 1-1: Trench in Normal Soil for PLB HDPE pipe (Not To Scale)

Depth of trench shall be at least 1650 mm in normal soil. However, for rail & road crossings the trench depth shall be at least 1000 mm. Depth of trench shall be at least 1000 mm in soft rock from the depth soft rock is encountered i.e. in case soft rock is encountered at say 500 mm then the actual depth of the trench shall be 500+1000 = 1500 mm limited to a maximum depth of 1650mm. Depth of trench shall be at least 800 mm in hard rock from the depth hard rock is encountered i.e. in case hard rock is encountered at say 300 mm then the actual depth of the trench shall be 300 + 800 = 1100 mm limited to a maximum depth of 1650mm. For excavation in hard rock, controlled blasting can be resorted to. The Contractor shall obtain necessary permission from the statutory authorities for blasting and the use of explosives for this purpose. No blasting is permitted near permanent work or dwelling. Blasting shall be so made that pits are as near to the design dimensions as practicable. Jackhammer can also be used for the excavation. The width of trench at the top and bottom shall be adequate for proper installation of PLB HDPE pipes, RCC hume pipes, GI pipes, Warning Brick/Stone, Warning tape etc. as per requirement. The trench depth shall be measured from the bottom of the trench. Trench shall be located at the lowest point of lower area if possible. Trench shall not be constructed at field boundary or any up-heap. In case of uneven ground, the Contractor ensure that the bottom of the trench is not uneven, the Contractor shall maintain minimum depth of the trench as per specifications and may be required to increase the depth at some locations and provide a suitable gradient in the trench.

During the construction of trenches, the Contractor shall be responsible for shoring and strutting the walls of the trench on either side by using suitable means such as wooden planks to avoid subsidence of soil. The Contractor shall also be responsible for supporting the exposed plant/facilities of other utilities such as water, gas and oil pipes, electric, telephone or fibre optic cables etc to avoid any possible damage. The Contractor shall also be responsible for any dewatering of the trench during digging and installation of pipes.

In case it is necessary to get around a large obstacle such as a boulder or an underground plant/facility, which has not been anticipated earlier the trench may be given a gentle bend within permissible radius or by construction of a manhole. Wherever possible, it is preferable to avoid additional manholes.

The Employer's Project Manager or his/her authorised representative will be the authority to decide the classification of the soil i.e. normal soil, soft rock or hard rock. The decision of the Project Manager shall be final and binding on the Contractor.

The Contractor shall make all efforts in order to achieve the requisite depth as stipulated above in various soil strata. However, under exceptional conditions, as may be decided by the Employer's

Project Manager/ Engineer-in-Charge or his/her authorised representative, the excavation to a lesser depth may be acceptable. Under such circumstances, the reason for non-achievement of depth as per specification are to be recorded jointly by the Contractor and the Employer's site representatives representatives and approved by the Project Manager/Engineer-in-Charge or his/her authorised representative.

6.12.3.2 Backfilling

After installation of PLB HDPE pipes, RCC hume pipes or GI pipes, the backfilling of the trench shall be done. The PLB HDPE pipes shall be sandwiched with sand as per the Figure 3-1. Backfilling shall normally be done with the excavated soil, unless it consists of large boulders/stone in which case the boulders/stone shall have to be broken to a maximum size of 80mm. The backfilling should be clean and free from organic matter or other foreign material. The earth filling is done with a suitable mount to allow for any shrinking of soil at the later date. In case of regular footpath, temporary reinstatement shall be done after backfilling. The left out earth if any has to be disposed by the Contractor to a suitable location as indicated by authorities at his own cost. It is advisable to start backfilling of the trench from one end or after padding of the pipe to avoid uplifting. In case of soft rock as well as hard rock, the PLB HDPE pipe shall be covered with 1:2:4 concrete. The cross section of the concrete shall be 100 mm (depth) x 200 mm (width). The Contractor shall properly cure the concrete for four days. The backfilling of the remaining portion shall be done as stipulated for normal soil.

In lieu of PCC of 1:2:4, the Contractor may use RCC semi-circular split pipe sections (50 mm nominal inner radius of curvature, with minimum thickness of 20 mm) from top to cover the PLB HDPE pipes as a substitute and this will be treated at par with PCC of 1:2:4 for payment purpose. These RCC semi-circular split pipes shall be reinforced with wire mesh.

Under exceptional conditions, where the Employer agrees and approves excavation of trench to a depth lesser than 1650mm, as stated above, the backfilling shall be done as per following guidelines:

S.No.	Description	Additional protection of HDPE pipe
(a)	Excavation of 1650mm to 1000mm in normal soil or 1650 mm to 800 mm in footpath	No additional protection in addition to Warning Brick/Stone slab, Warning Tape etc.
(b)	Excavation of less than 1000mm to 500mm in normal soil or 800mm to 500 mm in footpath	PCC 1:2:4,100mm (depth) x 200mm (width) over the layer of sand or RCC semi-circular split pipe sections (50mm nominal inner radius of curvature) from top to cover the PLB HDPE pipes in addition to Warning Tape, Warning brick/Stone Slab etc.
(c)	Excavation of less than 500 mm to 300 mm in normal soil	Additional protection using G.I. pipes in addition to Warning brick/Stone Slab, Warning Tape etc.
(d)	Excavation of less than 300 mm in normal soil	Additional protection using G.I. pipes encased in 1:2:4 PCC, 100mm (depth) x 200mm (width) in addition to Warning Tape.

However, wherever sub-soil water is encountered at depth less than 1000 mm but more than 500 mm, RCC pipe only to be used for additional protection.

6.12.3.3 Warning Bricks

Bricks (non-modular) class designation-5(50) of the actual size 225 mm (Length) x 111 mm (Width) x 70 mm (Thick) shall be laid breadth-wise as per Figure: 3-1(average 8 bricks per metre) immediately above the sand layer in which PLB HDPE pipe is installed. Brick of size other than above may also be used. Warning bricks shall be used in city area i.e. within municipal limits. In lieu of Warning brick, the Contractor can use suitable stone slabs of 200mm (Width) x 25mm(Thick) as a substitute and this will be treated at par with warning brick for payment purpose.

6.12.3.4 Warning Tape

A warning tape, made of HDPE or LDPE (Low Density Poly Ethylene) other suitable inert material, containing a printed warning message, (Width:10 cm, Thickness: 500 micrometer) shall also be laid over the pipe, throughout the cable route at a depth of 1000mm in normal soil (the depth of Warning Tape in soft rock, hard rock and at less-depth stretches shall be proposed by the Contractor and approved by the Employer), for warning the person who will excavating the trench in future.

6.12.4 Payments

The unit rate quoted by the Bidder shall be irrespective of soil type such as normal soil, soft rock, hard rock and crossings such as pavements, all types of roads, rivers, nallah, bridges, culverts, rail track etc. encountered during the actual installation. The bidder are required to make their own estimates and offer a single uniform rate applicable for all kinds of soil strata and crossing. The Employer/Owner shall not entertain any additional claims/payments for any type of soil/crossing encountered during installation. Employer strongly recommends site visits/ investigation by the bidder (at their own cost) before submission of the bid for proper estimations. The Contractor shall be required to carry out excavation and back filling in accordance with this specification and provide all additional items required at its own cost for proper installation not limited to those described in this specifications.

Unit rate for excavation and backfilling shall inter alia include all related works/activities such as excavation, blasting of rocks and backfilling of trench, fixing of gradient of trench, excavation of trial pits if required, clearing of bushes, roots of trees along the trenches, cutting of bushes, trees, shoring, dewatering, excavation and backfilling of any temporary manhole, support of the existing facilities/plant, removal of left out material, breaking of pavement, clearing of obstacles, temporary reinstatement of footpath wherever required, providing and backfilling with sand, concreting for encasing of pipes/providing and covering with RCC semi-circular split pipe etc. suitable structures/techniques material for crossings (road, rail, culvert, bridge, river etc) for installation of PLB HDPE pipes, RCC hume pipes or GI pipes. The payment shall be made on actual route length where excavation and backfilling has been executed. Payment for warning tape shall be made as per actual quantity supplied and installed, as applicable.

In the event of excavation to a lesser depth, under exceptional conditions with the approval of the Employer's Project Manager/Engineer-in-Charge or his/her authorised representative as stated

above, the payment for such route lengths shall be made in the proportion of depth of excavation & backfilling w.r.t. the minimum stipulated depth of 1650 mm in normal soil (e.g. if the excavation and backfilling is done upto a depth of 1000mm (say) in normal soil, and the unit rate for excavation & backfilling per route km is Rs.A (say), then the payment shall be made at the rate of B=Rs.(1000/1650)xA). Further, no additional payment shall be made for PCC cover executed in the event of excavation to a lesser depth.

6.12.5 Installation of PLB HDPE Pipe

One PLB HDPE pipe shall be laid at bottom of the trench after making the surface smooth and providing 80 mm of sieved, stone free sand bedding. After laying the pipe additional sieved sand shall be added to increase the height of the sand layer to a total of 200 mm hence positioning the PLB HDPE pipe in the middle of the layer. Other important steps are described as under:

a. PLB HDPE Pipe shall be laid in a flat bottom trench free from stones, sharp edged debris.
b. The Pipe shall be placed in trenches as straight as possible. Minimum bending radius of pipe and fibre optic cable shall always to be taken into account.
c. The ends of pipes shall always be closed with end plugs to avoid ingress of mud, water or dust i.e. all pipe opening shall be sealed to avoid entry of foreign material.
d. The pipes shall be joined tightly & properly through plastic couplers and the joint shall be smooth and free from steps. The joints shall be made properly so that it passes the duct integrity test specified in this section. All joints shall be assembled with proper tools only.
e. Coupler shall not be placed along the bend portion of the pipe
f. Cable sealing plugs shall be provided at all manhole locations and at locations cable is coming out of the pipe and empty pipe ends i.e. all pipe openings shall be sealed to avoid entry of foreign objects.
g. PLB HDPE pipes shall be installed in a manner that fibre optic cable can be pulled, blown, de-blown without damaging the fibre optic cable due to stresses.

The Contractor shall all joints inspected before carrying out the backfilling, by a representative of Owner/Employer. Joints shall be visually inspected and checked for tightness.

6.12.5.1 Payment

Unit rate for installation of PLB HDPE pipes shall interalia include all related works/activities including installation of all accessories/hardware described in this section. The BoQ in the appendices indicates the total route length where PLB HDPE pipe shall be installed. Accordingly the unit rate quoted shall include all wastages (beyond permissible limit), working length etc. and all other items/works required for PLB HDPE pipe installation. The Owner/Employer shall not entertain any claims or payment towards installation of hardware/accessories, installation of additional lengths of PLB HDPE pipe required to be taken for working lengths and wastages (beyond permissible limit) etc. However, payments shall be made on pro rata based on actual fibre optic route length executed (except where trenchless digging is used for installation).

6.12.6 Manholes

Manholes shall be provided at every proposed and future joint location to house Joint Box and Optical Fibre cable service loops. The location for Joint boxes shall be decided during survey and detailed engineering. There can be three types of construction of manholes depending upon the location of the manhole. Each type of construction of manhole can be of two sizes (heights)

depending upon the utility. Where the manholes are placed on the footpath or where heavy vehicular movement is not expected, manhole with brick masonry wall (wall thickness min. 225mm and inside dimension 1000mmx1000mm square, inside wall 12mm cement plaster with 1:4 mix) can be constructed. However, in case the manhole is required to be constructed at the middle of the road or where heavy vehicular movement is expected, the manhole shall necessarily be of RCC construction. Such manhole shall be pre cast RCC Cylindrical pipe (spun concrete) with minimum wall thickness of 80mm and shall include Φ8mm or more steel reinforcement. The base of manhole in all types shall be minimum 80mm thick PCC and minimum internal diameter shall be 1000 mm. In case the base is constructed as integral part of the pre cast RCC cylinder, the base shall also be RCC. Height of the manhole, where joint boxes are to be kept, shall be of 1100 mm height. Manhole for keeping service loops of OFC shall be of minimum 400mm height. The cover shall be pre cast RCC, minimum 50mm thick. However, for easy handling purpose, the cover is to be constructed with suitable arrangement for lifting. The top of manhole should be flushed with the ground level. Manholes type approved by the Employer shall only be acceptable. Manhole shall be designed as per the typical drawing enclosed at Annexure-I. The manhole shall have two holes in each four perpendicular directions for PLB HDPE pipe entries and exits. Fixtures for placing cable and spliced Joint Box inside the manhole shall be provisioned. The joint box shall be mounted vertically on the wall of the manhole. The contractor shall carry out the required excavation and backfilling for the construction of the manhole. All PLB HDPE pipe entries, cable entries and holes shall be properly sealed.

The Contractor may propose double walled "Annual ring shaped conical manholes" meeting all the requirements of the manhole specified above. The assembly of conical manhole shall be made by using pre-cast steel (rod or wire-mesh) reinforced Concrete elements, which consists of annular rings different height and diameter (within permissible diameter range of conventional manhole manhole as specified above) placed over each other. Manholes type approved by the Employer shall only be acceptable. For installation of PLB HDPE pipe or trenchless digging or blowing of OFC, at times there might be requirement of providing temporary manhole or hand holes. No separate payment shall be admissible for such manholes or handholes and shall be deemed to be inclusive in the overall scope of work by the Contractor.

If required, as per the advice of the Employer, manholes shall also be installed along the existing installed PLB HDPE pipe routes to house joint boxes and cable service loops. Due care is to be taken so that the existing PLB HDPE pipe and OFC does not get damaged while placement of new manhole.

6.12.6.1 Payment

Unit rate for the manholes shall interalia include all related works/activities including RCC cylindrical pipe, Brick masonry work, PCC base, pre cast cover, excavation, backfilling, supply, transportation and installation of all material & accessories required for construction of manhole as per specification. Provisional quantity for all types of manholes (viz. manhole for service loops and for joint box, RCC and Brick Masonary Construction) manholes has been identified in the appendices, payment shall be made based on actual quantities executed.

6.12.7 Reinstatement

The contractor shall be required to carry out reinstatement of the excavated area in case the concerned authority requires so. Reinstatement shall include all works necessary (such as

reconstruction of metalled/asphalt road, footpath etc) to restore the excavated area to original quality and shape. Temporary reinstatement of footpath stipulated in this section shall be carried out as a part of backfilling. The Contractor shall be responsible for carrying out complete reinstatement work irrespective of area or type of reinstatement without any additional cost implication to Employer.

6.12.8 Installation of GI Pipe

The GI pipe of nominal bore of minimum 100 mm shall be laid wherever road crossings, bridge crossings, railway crossings are encountered on the route as well as on wall/floor crossings in a building. PLB HDPE pipe shall be inserted into GI pipe. Whenever it is not possible to install the FO cable underground due to non availability of the right of way or any other unavoidable reasons, the HDPE ducts along with FO cable shall be installed in GI pipe on the wall inside the sewerage pipe and or on the existing rock/concrete/brick wall/surface with suitable fixing arrangement and concreting, if necessary, with specific approval of the Employer in case to case basis. The GI pipe shall conform to at least medium class and conform to IS: 1239 (Part –I). In regard to bridge and culvert crossing, GI pipe may be installed by concreting the GI pipe along the bridge or by using supporting brackets or by laying underneath the existing footpath etc. The PLB HDPE pipes shall be installed through this GI pipe. Wherever underground fibre optic cable is required to be spliced to overhead fibre optic cable using the outdoor FODPs/Joint Boxes installed on towers, GI pipes shall be used to protect the portion of the cable/duct upto a height of about 6 to 10 meters and shall be extended in the ground up to suitable depth of the trench so that minimum bending radius of the cable is maintained. The GI pipe shall be properly clamped/ fixed on the tower leg. The Contractor shall supply and install all necessary accessories as part of the installation work.

The Contractor shall propose the exact methods and procedures for implementation of crossings taking into consideration the following guidelines, for approval by the Employer:

a. The GI pipe shall be extended at least 5 meters on each side of crossing subject to availability of space and approval of the Employer.
b. Two GI pipes shall be joined using proper tools, sockets and accessories etc.
c. Proper arrangements shall be made to seal the ends of GI pipe after installation of PLB HDPE pipes.
d. Minimum bending radius of optical fibre cable shall always be taken into consideration.
e. 1:2:4 concrete shall be used for encasing of the GI pipe, wherever required.
f. The floor of the trench shall be levelled by laying at least 50 mm of soft soil or sieved sand before installing the GI pipe.
g. The GI pipes shall be supplied in standard lengths of 6m or as approved by Employer.
h. The GI pipe shall be sealed at both ends.
i. The GI pipe of suitable length shall be provided at road crossings, bridge crossings, railway crossings encountered on the route as well as on wall/floor crossings in a building and also for protection of fibre optic cable at tower/pole mounted joint boxes.

6.12.8.1 Payments

The quoted unit rate for the supply of GI pipe shall interalia include all required accessories

(sockets, joints, brackets, clamps etc) and material (cement, sand, chips etc). The quoted unit rate for the installation of GI pipe shall interalia include all related works/activities including installation of hardware and accessories (sockets, joints, brackets, clamps etc), fixing arrangement and concreting required for GI Pipe installation at road crossings, bridge crossing, railway crossing encountered on the route as well as on wall/floor crossings in a building. The BoQ given in the appendices indicate the total fibre optic route length where and also for protection. PLB HDPE Pipe shall be laid in the GI pipe, accordingly the quoted unit price shall take into account working lengths and wastages. The Owner/Employer shall not entertain any claims or payments towards installation hardware, accessories, concreting, cementing, working length and wastage etc. The Payment shall be made based on actual fibre optic route length executed inside GI pipe.

6.12.9 Installation of RCC Hume Pipe

Minimum inside diameter 100 mm, NP3 RCC hume pipe shall be laid wherever river, nallah crossing encountered on the route. The RCC pipe shall conform to IS:458. PLB HDPE pipe shall be inserted into RCC hume pipe. The Contractor shall propose the exact methods and procedures for implementation of crossings taking into consideration the following guidelines, for approval by the Employer.

a. The RCC hume pipe shall be extended at least 5 meters on each side of river, nallah subject to availability of space and approval of the Employer.
b. Two RCC hume pipes shall be joined using RCC collar and properly cemented.
c. Proper arrangements shall be made to seal the ends of RCC hume pipe after installation of PLB HDPE pipes.
d. Minimum bending radius of optical fibre cable shall always be taken into consideration.
e. 1:2:4 concrete shall be used for encasing of the RC pipe collars, wherever required.
f. The RCC hume pipes shall be supplied in standard lengths of 2m or as approved by Employer.
g. The RCC hume pipe shall be sealed at both ends.

6.12.9.1 Payment

The quoted unit rate for the supply of RCC hume pipe shall interalia include all required accessories (collars, clamps etc) and material (cement, sand, chips etc). The quoted unit rate for the installation of RCC hume pipe shall interalia include all related works/activities including installation of accessories and other hardware, fixing arrangement, concreting required for RCC hume pipe installation. The BoQ given in the appendices indicate the total fibre optic route length where PLB HDPE Pipe shall be laid in the RCC hume pipe, accordingly the quoted unit price shall take into account working lengths and wastages etc. The Owner/Employer shall not entertain any claims or payments towards installation hardware, accessories, concreting, cementing, working length and wastage. The Payment shall be made based on actual fibre optic route length executed inside RCC hume pipe.

6.12.10 Underground Fibre Optic Cable Installation

The cable shall be installed inside one of the 40mm diameter PLB HDPE pipe installed under this package along the route(s). Generally the cable shall be installed by compressed air blowing technique. However, for spans upto 150 meter, the Contractor can use pulling method for

installation of OFC in HDPE pipe. If any temporary manhole or handhole is required for installation of OFC, the same will be done by the Contractor without any additional cost implication. Adopting pulling method for installation of OFC for spans more than 150 meter, shall be subjected to approval of the Employer and shall be substantiated by proper justification. Contractor shall take into consideration the following guidelines, for installation of OFC approval by the Employer.

a. The Optical Fibre Cable Drums shall be handled with utmost care. The drum shall not be subjected to shocks by dropping etc. They shall not be normally rolled along the ground for long distance and when rolled, shall in the direction indicated by the arrow. The battens shall be removed only at the time of actual laying.
b. A blowing machine in association with an appropriate compressor shall be used for blowing.
c. Temporary blowing chambers (if required) shall be constructed and then backfilled after blowing operation is completed.
d. Locations along the route, which provide easy access points for blowing machine and compressor, shall be determined.
e. Before starting the cable blowing, PLB HDPE pipe shall be checked for obstacles or damage. Checking shall be done by using a proper sized mandrel.
f. Always blow downhill wherever possible.
g. Multiple blowing machines may be used in tandem if so required.
h. Care must be taken not to violate the minimum bending radius applicable for the fibre optic cable. Tension in the cable during laying shall not exceed tension limit of the OFC.

Installation by pulling may be permitted by the Employer only in specific cases where installation by blowing is not feasible on specific approval from the Employer. In case pulling is used, the pulling speed shall be determined considering the site condition.

While installing the cable, excess length of about 10 meters shall be stored at each joint location for each side. Excess length of 10 m shall be kept at one ends of a road crossing, culvert crossing and 20 meters at one end of bridges, However, exact excess lengths and manhole locations shall be finalised during detailed engineering depending upon the site requirement.

6.12.10.1 Payment

Unit rate for installation of fibre optic cable shall interalia include all related works/activities including associated accessories, tools & tackles, machinery etc. The BoQ in the appendices indicates the total fibre optic route length where fibre optic cable shall be installed. Accordingly unit rate shall include all working allowances and wastages, hardware and accessories required for installation of optical fibre cable. The Owner/Employer shall not entertain any claims or payment towards installation of hardware/accessories, any additional length of cable for working allowances and wastages etc. The payment shall be made on prorata based on actual fibre optic route length executed including cable service loops/excess cable as stipulated above.

6.12.11 Trenchless Digging

Trenchless technology is the science of installing, repairing or renewing underground pipes, PLB HDPE pipes and cables using trenchless techniques, which minimise or eliminate the need for excavation. Trenchless (also called “No-Dig”) techniques can reduce environmental damage and

social costs, and at the same time provide an economic alternative to open trench methods of installation, renewal, and repair.

It is envisaged that trenchless digging shall be used in short section for crossing National highways, important road or rail crossings etc. Trenchless digging shall be used where the concerned authorities do not permit open cut method and it is essentially required to carry out for installation of HDPE pipe. The Bill of Quantity (BoQ) for various trenchless digging requirements is defined in the Appendices, however, the actual quantities shall be finalised based on the actual requirement.

6.12.11.1 Contractor's Scope of Work for Trenchless Digging

The Contractor's scope of work under this contract shall include, but shall not be limited to, the following:

(a) Survey of the approved routes for installation of PLB HDPE pipe by trenchless digging.
(b) Obtaining statutory clearances from regulatory bodies, statutory bodies such as municipality, highway authority, electrical utilities, forest department, gas authorities etc. on behalf of the Employer/Owner.
(c) Identify, provide and transport all equipment to the locations along the route as per the requirement to install PLB HDPE pipe by trenchless digging method.
(d) Excavation and backfilling of entry and exit pits.
(e) Detection and protection of existing underground facilities of other utilities along the route.
(f) Installation of 40 mm PLB HDPE pipe along the specified route by trenchless digging method and joining of PLB HDPE pipe by plastic coupler and sealing of PLB HDPE pipe at both ends by end plugs.
(g) Installation of manholes, termination of PLB HDPE pipes into the manholes and sealing of PLB HDPE pipes at the manhole entry as per approved drawings.
(h) Providing all plants, tools and tackles, consumables, marking and fencing required for the execution of the work as per the best engineering and safety practices.
(i) Maintain all lights, guards, plates, safety measures, sign boards etc. when and where necessary and/or required by the Owner/Employer or by any other statutory authority for the protection of works and/or for the safety and convenience of the public or the workers at the installation sites.
(j) Arrange electricity by arrangement of generators or other means at the site wherever required.
(k) Arrange construction water at the sites.
(l) Intimation to road maintenance agency, traffic police, other concerned utilities as necessary.
(m) Testing and inspection of installed PLB HDPE pipes and manholes.
(n) Rectifications, redigging and re-installation of PLB HDPE pipes in case of problem during testing and fibre optic cable blowing/pulling.

6.12.11.2 Clearances

The Contractor shall be responsible for obtaining necessary clearances for the work from the authorities on behalf of the Employer/Owner and provide requisite copies of information, maps, survey report etc to the authorities. The Employer/Owner shall assist the Contractor in obtaining such clearances by providing the authority letter or any other relevant document. The Contractor shall make an all out effort with the concerned authority to get clearances expeditiously and to negotiate the least cost to the Employer/Owner. The Employer/Owner shall furnish all required

bank guarantees and make payments to the concerned authorities directly based on the demand letter obtained by the Contractor from the concerned authorities. The Contractor shall ensure quick and speedy clearances in order to implement the project within stipulated schedule. In case the authorities have some objections on certain sections of routes proposed and are unwilling to provide clearances, the Contractor shall propose an alternate route, promptly carry out the survey and submit specific survey report for that and reapply for clearance after taking into account the comments/objections of the authority.

6.12.11.3 Site Investigation

The Contractor may collect all available information regarding existing underground services and take necessary care to identify and protect them during execution. Information regarding the subsoil, existing services or structure to be obtained by the Contractor from the local authorities and documentation of earlier jobs for used for laying of utilities, pipelines, crossings, existing pipes, type of soil etc. Ground penetrating radar system (GPRS) having capability of capturing greater information often detecting non-metallic pipes, cables, and zones of leakage and sub-surface discontinuities such as road construction layers or rock strata may also be used.

The available information shall be used to finalise the depth and method of trenchless digging for various crossings. The depth of trenchless digging shall not be less than 1.65 m, however, in case of uneven surface or for avoiding obstruction from other underground utilities, the depth may be higher. The Contractor shall take due care and precaution during trenchless digging to avoid possible damage of other underground plants/facilities in the route and shall indemnify the Owner/Employer for all damages and the Contractor shall be solely responsible for all the damages and losses. The Owner/Employer shall not be liable for any damages/losses.

6.12.11.4 Site Preparation

The required size of entry and exit pits shall be prepared by the Contractor for each site where trenchless digging and installation of manhole are required to be carried out.

Trench boundaries may be marked with rope / lime powder prior to digging in order to achieve desired straight route. Trees and their roots shall be negotiated properly to avoid damage while trenching and having safe passage to the OFC.

6.12.11.5 Excavation and Backfilling

The Contractor shall carry out excavation and backfilling for the entry and exit pits in all kinds of soil strata i.e. irrespective of the soil characteristics at all required installation sites for laying PLB HDPE pipe by trenchless digging.

The excavation of pits shall be done at such places and times so that the obstruction to pedestrian and vehicular traffic is minimum and as per the regulations by various administrative authorities. The Contractor shall take due care and precaution during excavation to avoid possible damage of other underground plants/facilities in the route and shall indemnify the Owner/Employer for all damages and the Contractor shall be solely responsible for all the damages and losses. The Employer/Owner shall not be liable for any damages/losses. The positions of the entry/exit pits shall be matched with the required manhole locations for easy installation of manholes and easy termination of PLB HDPE pipes inside the manhole. The entry and exit depth of PLB HDPE pipes shall be about 1.5 m in normal soil.

After installation of PLB HDPE pipes and manholes, the backfilling of the entry and exit pits shall be done. Backfilling shall normally be done with the excavated soil, unless it consists of large boulders/stone in which case the boulders/stone shall have to be broken to a maximum size of 80mm. The backfilling should be clean and free from organic matter or other foreign material. The earth filling is done with a suitable mount to allow for any shrinking of soil at the later date. In case of regular footpath, temporary reinstatement shall be done after backfilling. The left out earth if any has to be disposed by the Contractor to a suitable location as indicated by authorities at his own cost.

Final inspection of the backfilling shall jointly be done by the Contractor and Employer/Owner after the backfilling is completed and the Contractor shall rectify the defects, if any, without any cost to the Employer/Owner.

6.12.11.6 Trenchless Digging

The Contractor shall use the suitable trenchless digging method depending on the actual site conditions, locations, soil characteristics, length of the digging etc. to complete all digging requirement. The trenchless digging shall be carried out at a depth not less than 1.65 m irrespective of the soil characteristics encountered at each site/route, however, in case of uneven surface the depth may still be higher. The Contractor may use the following trenchless digging methods for installation of PLB HDPE pipes:

(i) Manual/hand augering
(ii) Impact Moling
(iii) Horizontal Directional Drilling (HDD)

The BoQ does not specifically indicate the method of trenchless digging to be adopted, instead the BoQ indicates various spans for which the bidder may quote different rates depending upon the method of trenchless digging to be adopted. The exact method of installation shall be finalized and approved by the Employer before execution.

The final bore size of digging shall be sufficient enough to directly install 40 mm PLB HDPE pipe easily and without any problem.

Generally, the trenchless digging shall be carried out continuously along the approved routes from manhole to manhole, however, long installation lengths can be achieved by dividing the working length into shorter sections depending upon characteristics of machines, soil/site conditions and permissions granted by the statutory authorities.

If any existing utilities pipes are detected at the digging depth, the Contractor shall carry out the trenchless digging at higher and adequate depth to avoid the damage of such existing utilities and no extra payment shall be payable for digging at higher depths. Further, in case the Contractor is required to make repeated attempts due to obstructions encountered, no additional payments shall be released for aborted attempts.

The required dewatering shall also be carried out by the Contractor at required installation sites for proper installation of PLB HDPE pipes and the manholes, wherever required. The Contractor shall ensure minimum inconvenience to public during dewatering.

The installation of PLB HDPE pipes shall be done as linear as possible in order to achieve smooth blowing/pulling of optical fibre cables through them. Bends, wherever unavoidable, shall be smooth and shall not be exceed 20 degrees.

6.12.11.7 Installation of PLB HDPE pipes and manholes

After achieving the final and adequate bore size, the PLB HDPE pipe shall be installed in the bored holes from manhole to manhole or as directed by the Employer based upon the actual site requirement. The manholes shall also be installed after excavating the soil for the required depths and size. The bottom surface shall be properly levelled and compacted before installation of the manhole. The manhole cover top surface shall be flushed with the ground surface within city areas. The PLB HDPE pipes shall be entered inside the manhole by the holes kept for this purpose. Smooth entry of PLB HDPE pipes into the manholes within permissible bending angle shall be ensured by proper method and planning during installation of PLB HDPE pipes. After installation of manholes, the PLB HDPE pipes shall be properly terminated inside the manholes and PLB HDPE pipes shall be sealed properly at the manhole entry as per the approved drawing/procedure. The Contractor shall submit the exact sealing method for Employer's approval.

PLB HDPE pipes shall be laid from manhole to manhole without any mid span joints. For longer sections without having manholes in between, the PLB HDPE pipes shall be joined properly with the plastic couplers. It shall be ensured that the PLB HDPE pipes are joined properly for smooth blowing/pulling of fibre optic cable. However, mid span joining of PLB HDPE pipes by plastic coupler may be allowed only under exceptional circumstances and shall be done only after Employer's approval. The manholes shall be installed as per the approved plan.

The PLB HDPE pipes shall be installed in a manner that the FO cable can be pulled, blown, de-blown without damaging the FO cable due to stresses.

In case of sharing of trenchless digged bore with other utilities or nearby existing other utility pipes/manholes, the manhole to be installed under this project and by the other utility shall be staggered properly and the PLB HDPE pipes shall be terminated accordingly as described above.

The PLB HDPE pipes shall be installed in a most possible straight way to avoid problems during FO cable blowing/pulling. In case, the blowing/pulling is not achieved due to improper PLB HDPE pipes installation, the Contractor shall rectify the problem and shall reinstall the PLB HDPE pipes, if necessary, to ensure the smooth blowing/pulling. However, no extra payment shall be made towards this rectification and reinstallation of PLB HDPE pipes. The installed and re-installed PLB HDPE pipes shall be checked as described below to avoid restriction or obstruction in FO cable blowing.

6.12.11.8 Acceptance Testing of PLB HDPE pipes

After installation of PLB HDPE pipes, the PLB HDPE pipes shall be checked over the whole lengths in order to ensure integrity and its suitability during fibre optic cable blowing/pulling. The installed PLB HDPE pipes shall be checked as per the requirements specified in Section 6. In case of any problem, the Contractor shall rectify the same and re-digging and/or re-installing of PLB HDPE pipes shall be carried out by the Contractor at no additional cost to the Employer. After acceptance test, both ends of each PLB HDPE pipe shall be again properly sealed.

The Contractor shall submit the exact method/procedure for the above tests for Employer's

approval.

6.12.11.9 As Built Drawings/details

The Contractor shall submit the as built drawings for the whole route indicating the route, depth of digging and manhole locations for easy maintenance of the installed system.

6.12.11.10 List of Drawings/documents required to be submitted for Employer's approval

The Contractor shall ensure that the required drawings and documents are submitted well in time to avoid any delay in approval and project execution. The following minimum drawings and documents are required to be submitted by the Contractor for approval of the Employer:

a. Final Route Survey Report including manhole locations
b. The methods/procedures and the equipment/machines to be used for different types of trenchless digging techniques
c. Bill of quantities for various items as per contract
d. SAT Reports
e. As built drawings

3.12.11.11 Payment

The quoted unit rate for trenchless digging shall interalia include all related works/activities (listed in Trenchless Digging above, etc.) including supply and installation of accessories and other hardware required. The BoQ given in the appendices indicate the total fibre optic route length where various methods of trenchless digging shall be used for laying PLB HDPE Pipe. The BOQ indicated in the appendices are tentative and shall be finalised during detail engineering. For PLB HDPE pipe installed using trenchless digging, separate payment for installing PLB HDPE pipe shall not be made. The Owner/Employer shall not entertain any claims or payments towards any installation hardware, accessories etc. The Payment shall be made based on actual quantity executed for different spans of trenchless digging.

6.12.12 Optical fibre termination and Splicing

Termination and splicing of optical fibre cables is described in following sections.

6.12.12.1 Fibre Optic Distribution panels

At each location requiring the termination of at least one fibre within a cable, all fibres within that cable shall be connectorised and terminated in FODPs in a manner consistent with the following.

a. All fibre optic terminations shall be housed using FODPs provisioned with splice organisers and splice trays. All fibres within a cable shall be fusion spliced to pre-connectorised pigtails and fitted to the backside of the provided couplings. The pigtails and the fibres shall be stored and dressed neatly in the provided trays and holders. The pigtails/fibres shall be numbered using suitable ferrules.
b. Ground lugs shall be provided on all FODPs and the contractor shall properly ground all FODPs. The FODPs shall be properly fixed/grouted

to the floor and or with wall with better support. Necessary installation material for fixing the FODP on wall or ground shall be provided by the Contractor

c. The location of FODPs rack shall be fixed by the contractor, with the Employer's approval.
d. Flexible protection shall be provided to the patch cord bunches going out from FODP to another equipments.

6.12.12.2 Optical Fibre Connectors

FC-PC type connectors shall be used. Average loss of the FC-PC connectors shall not exceed 0.5dB.

6.12.12.3 Joint Box

The joint box shall be properly installed, assembled and sealed as detailed in specification Installation and sealing of joint box shall be done according to the instruction manual provided with the joint box. The following general criteria must be fulfilled.

(a) Fibre loose tube shall be placed safely inside the joint box and routed properly.
(b) Sheath shall be fully inside the joint box and FRP shall be properly fixed.
(c) Silica gel shall be placed inside the joint box before closing the box
(d) The sealing portion of the cable and joint box shall be filled before placing heat shrinkable sleeves. Rubber gaskets may be placed according to the instruction manual, if any.
(e) The heat shrinkable sleeves shall be sealed with low flame of Hot gun till sealing liquid properly melt and gripped. The cable entry ports being used for cable entry into the joint box shall be sealed by heat shrink sleeves only for ease of installation and re-entry. The length of the sleeves shall cover the full length of the cable entry port and ≥30mm length of the cable. The joint box shall be fixed vertically on the wall of the manhole with the help of suitable holding SS ring and nut bolt, arrangement keeping the cable entry point downwards. However, under exceptional conditions where joint boxes are required to be placed in manholes meant for keeping service loops, the same may be kept in horizontal position.

6.12.12.4 Optical Fibre Splices

Splicing of the optical fibre cabling shall be minimized through careful planning. It is important that all splicing work be done under clean conditions. All required splices shall be planned to occur at Joint location/manhole. All optical fibre splicing shall comply with the following:

a. All fibre splices shall be accomplished through fusion splicing.
b. Each fibre splice shall be fitted with a splice protection sheath fitted over the final splice.
c. For splicing of each fibre, every effort shall be made to minimise the bidirectional average splice loss.
d. All splices and bare fibre shall be neatly installed in covered splice trays.
e. Average bi-directional splice loss at any particular splice shall not exceed **0.1dB** but total bi-directional average of all splices in a link shall not exceed **0.05dB.**

f. Fibre optic cable service loops as indicated in technical specifications shall be provided.

6.12.12.5 Splicing of fibres in existing Joint Box or FODP

In case it is required to do resplicing for rectification or splice new cable in an existing Joint Box, it above stipulations for splicing shall be applicable. In such conditions, splicing of only few fibres of the existing cables in the Joint Box with the new cable shall be done. For working in existing Join Box/FODP, the Contractor shall take due care so that the traffic in the balance fibres is not affected**.**

6.12.12.6 Service Loops.

For purposes of this specification, cable and fibre service loops are defined as slack (excess) cable and fibre provided for facilitating the installation, maintenance and repair of the optical fibre cable system.

a. Outdoor Cable Service Loops: At manhole chambers splices are installed with sufficient fibre optic cable service loops (as mentioned in Technical Specification) such that the recommended minimum bend radius is maintained while allowing for installation or maintenance of the cable to be performed in a controlled environment at ground level. Optical cable service loops (excess cable) shall also be provided at all crossings in manholes (as mentioned in Technical Specification).
b. Indoor Cable Service Loops: At FODPs, Contractor shall provide at least three (3) metres of cable service loop. Service loops shall be neatly secured and stored, coiled such that the minimum recommended bend radius is maintained.
c. Fibre Units Service Loops: For all fibre optic cable splicing, the cable shall be stripped back a sufficient length such that the fan-out of fibre units shall provide for at least one (1) metre of fibre unit service loop between the stripped cable and the bare fibre fan-out.
d. Pigtail Service Loops: Connectorised pigtails spliced to bare fibres shall provide at least 0.5 metre of service loop installed in the FODP fibre organizer and at least one (1) metre of service loop to the couplings neatly stored behind the FODP coupling panels.
e. Fibre Service Loops: At least 0.5 metre of bare fibre service loop shall be provided on each side of all fibre splices. The bare fibre service loops shall be neatly and safely installed inside covered splice trays.

6.12.13 Site Acceptance Testing (SAT)

The tests, checks, adjustments etc conducted by the Contractor prior to offering the equipment/material for SAT shall be called Pre-SAT activities. During installation the Contractor shall maintain proper record of measurements in approved format and shall be given to the Owner/Employer (along with As Built drawing of the routes) for cross checking during SAT.

6.12.13.1 SAT for Excavation, Backfilling, Installation of Pipes, Manholes.

The tests shall include but shall not be limited to the following:

a. Depth Check: One sample every 200 mtrs, Contractor shall prepare a sample pit at a location identified by the Employer. Depth of each item, warning tape, no. of warning bricks (if applicable), pipes, cable etc. shall be measured. Depth shall be as per technical specifications and shall correspond to recorded measurements.
b. Crossings: 10% of each type, visual inspection for checking conformance with drawings, thickness of Concrete, RCC Hume Pipe and GI pipe.
c. Manholes: As per technical specifications.

After inspection the Contractor shall backfill and carry out other restoration work at no additional cost to the Owner/Employer.

6.12.13.2 SAT for Underground Fibre Optic Cable

SAT for optical fibre cable shall be carried out link by link from FODP to FODP.

Prior to installation, every fibre optic cable segment shall be tested for continuity and attenuation and measurements shall be recorded. Test requirements are as per table 3-7.

Any discontinuity or attenuation beyond permissible limits in any of the fibres has to be recorded and brought to the notice of Employer.

Upon completion of a continuous cable path (FODP to FODP locations), all fibres within the cable path shall be demonstrated for acceptance of the cable path. Test requirements are indicated in table 3-9 and in no case losses attributed due to other factors viz. extra splice, kinks, will be acceptable to the limit determine by the following formula:

Max attenuation @ 1550nm: 0.21dB/km + 0.05dB x total no of splices + 0.5dB x connector
Max attenuation @ 1310nm: 0.35dB/km + 0.05dB x total no of Splices + 0.5dB x connector
Any increase in attenuation or step discontinuity in attenuation shall not be acceptable and shall constitute a cable failure during installation. The Contractor shall have to either replace the concerned cable span at its own cost or provide additional splicing, joint box and manholes required to rectify the fault at its own cost. The fibre attenuation shall be tested again after replacement or rectification of fault.

In case it is found that the splices are bad (loss is unacceptable as per approved test procedures), the Contractor shall have to do re-splicing and provide new Joint Box wherever required at no additional cost to the Owner/Employer. After re-splicing the end to end testing shall be repeated. The splice testing requirements are indicated in table 1-8

.

Table 1-7:
Fibre Optic Cable Pre-Installation Testing

Item:	Description:
1.	Physical Inspection of the cable assembly for damage
2.	Optical fibre continuity and fibre attenuation with OTDR at 1550 nm

Table 1-8 :
Fibre Optic Cable Splice Testing

Item:	Description:
1.	Per splice attenuation with OTDR (bi-directional average) at 1550 nm
2.	Physical inspection of Joint Box for proper fibre routing techniques
3.	Physical inspection of sealing techniques, weatherproofing, etc.

Table 1-9:
Fibre Optic Cable Commissioning Testing

Item:	Description:
1.	Fibre continuity and link attenuation (bi-directional) between FODP connectors at two ends for each fibre at 1310 &1550 nm by OTDR
2.	Fibre continuity and link attenuation (bi-directional) between FODP connectors at two ends for each fibre at 1310 &1550 nm by Power Meter & Laser Source
3.	Average splice loss (bi-directional) for each splices and average splice loss for the link by OTDR at 1550 nm.
-End of Table-	

6.12.13.3 SAT for Joint Box

All the joint boxes shall be physically inspected (visual) tightness checking of clamps and bolts, heat shrink sleeves and proper installation in the manholes. In case the Employer finds the workmanship of the installation of joint box to be poor, the Contractor shall make good the same. Consumable, if any e.g. joint box sealing, heat shrink sleeves, required for rectification work shall be provide by the Contractor at no extra cost to Employer/Owner.

6.12.13.4 SAT for PLB HDPE pipe

For PLB HDPE pipes, duct integrity tests shall be carried out as described below. The **Duct cleaning (Sponge test)** test shall be carried out on all the ducts before blowing/pulling of the cable between two consecutive manholes on the PLB HDPE pipes.

a. Duct cleaning (Sponge test)

Compressed air should be blown through the PLB HDPE pipe in order to remove dirt and water, if any, with the help of suitable Air Compressor. A short blast of air about 2-3 Bar shall be blown through the PLB HDPE pipe for about 2 minutes. Sponge shall be blown through the duct to thoroughly clean the duct from inside.

b. Crush and deformity test

Place a shuttle of length <15cm and O.D. 80% of the inner diameter of the offered PLB HDPE pipe. Connect the compressor pipe with a suitable flexible wire grip at the other end to catch the shuttle and start blowing operation to the pipe and check if shuttle reaches at the other end. If shuttle gets stuck the Contractor shall adopt suitable arrangement at site to locate the deformity/damage in the HDPE pipe, repair the pipe and ensure end-to-end continuity of the duct in sound condition

6.12.13.5 SAT for other items

Tests for other components such as FODP etc. shall be done as per the direction of Employer

6.12.14 Documentation

Apart from survey reports as mentioned above, the Contractor will submit the following documents after completion of the job and acceptance by the Employer:

(a) As built drawing of the route indicating the distance from road centre, OFC drum length, location of other utilities, link BoQ, OFC loop length, name of the road, sections and positions of PLB HDPE pipes, couplers, warning bricks/stone, manholes, G.I. pipes, RCC pipes, joint box, conduits, bends, trays, optical fibre cable loop lengths in manholes etc.
(b) Depth of PLB HDPE pipe in various sections of the route executed through open trenching.
(c) Sections of trenching digging executed through various methods.
(d) Splicing/termination details of each joint box/FODP. Attenuation and splicing loss measurement data shall be submitted for each fibre.
(e) Specific deviation w.r.t. the installation and supply items, if any, from the technical specification. If there is no deviation, either explicit or implicit, the Contractor will provide a certification to this effect.
(f) Without submission of the above documentations, the Site Acceptance Testing of various items as described above will be deemed to be incomplete.

6.12.15 Interconnection

The contractor shall also interconnect their Fibre Optic Cable system at both ends with existing Fibre Optic cable through splicing in Joint boxes or through connection by patch cords at FODPs, as required. The exact method of interconnection shall be finalized during project execution.

6.12.16 Miscellaneous Jobs

In order to provide end-to-end connectivity, it may be required to execute some miscellaneous jobs as detailed below.

6.12.16.1 Routing of Cables inside building.

In order to route the OFC (Optical Fibre Cable) from the underground trench to the FODPs it is necessary to install the cable on walls inside PLB HOPE pipe over the existing cable tray/raceways inside the building.

6.12.16.2 Installation of PLB HDPE pipe on wall

The PLB HDPE pipe may be required to be installed on the wall using steel or G.I clamps. The contractor will provide the required clamps and other consumables sufficient for such installation. The contractor will take care of aesthetics while installation. The OFC will be pulled through the PLB HDPE pipe with due care as described in relevant Para of this specification.

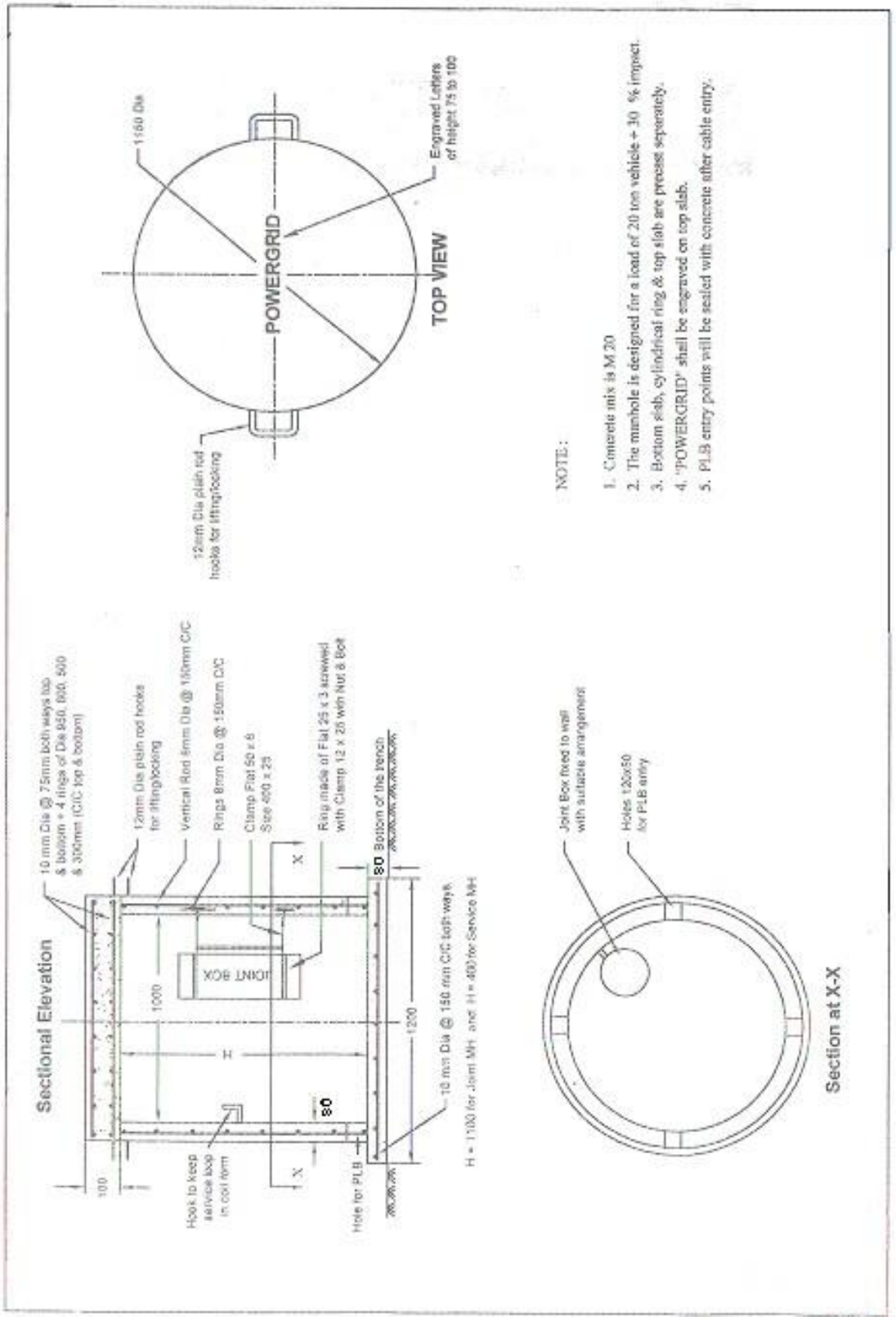
Sectional Elevation
10 mm Dia @ 75mm both ways top & bottom + 4 rings of Dia 950, 800, 500 & 300mm (C/C top & bottom)
12mm Dia plain rod hooks for lifting/locking
Vertical Rod 8mm Dia @ 150mm C/C
Rings 8mm Dia @ 150mm C/C
Clamp Flat 50 x 6 Size 400 x 25
Ring made of Flat 25 x 3 screwed with Clamp 12 x 25 with Nut & Bolt
Bottom of the trench
JOINT BOX
1000
1200
H
X
100
Hook to keep service loop in coil form
Hole for PLB
10 mm Dia @ 150 mm C/C both ways
H = 1100 for Joint MH and H = 400 for Service MH
Joint Box fixed to wall with suitable arrangement
Holes 120x50 for PLB entry
Section at X-X
1150 Dia
Engraved Letters of height 75 to 100
POWERGRID
TOP VIEW
12mm Dia plain rod hooks for lifting/locking
NOTE :
1. Concrete mix is M 20
2. The manhole is designed for a load of 20 ton vehicle + 30 % impact.
3. Bottom slab, cylindrical ring & top slab are precast separately.
4. "POWERGRID" shall be engraved on top slab.
5. PLB entry points will be sealed with concrete after cable entry.